INSTRUCTIONS MANUAL

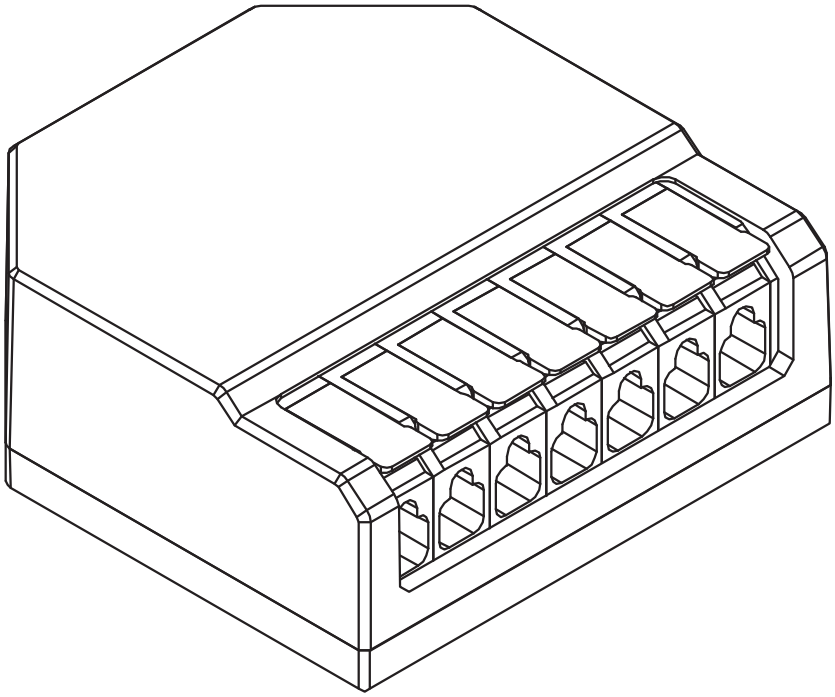

2 CH Wireless DC Dimmer

Product Code: DD02, DD02-MW

Ver 5.0

A. PRODUCT SPECIFICATIONS

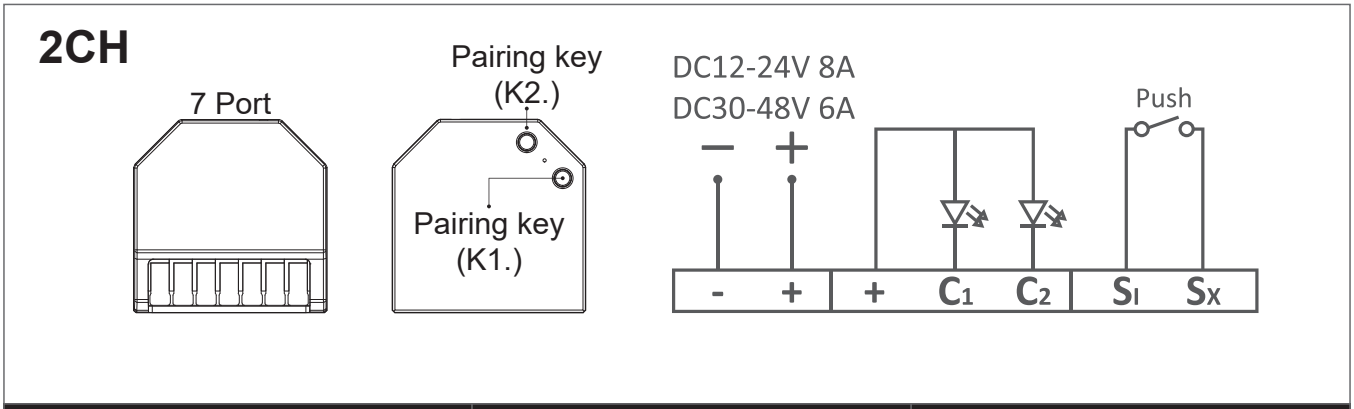

PRODUCT CODE	DD02	DD02-MW
LOAD	12-24 Vdc 8A Max | 30-48 Vdc 6A Max	
RADIO FREQUENCY	433Mhz for Kinetic Switch & Remote	
SMART PROTOCOL	\	2.4Ghz, Matter over Wi-Fi
WALL SWITCH COMPATIBLE	Yes	
CHANNEL	2CH	
IP RATING	IP20	
TEMP. RANGE	-20 ~ 40°C	
HOUSING TEMP.	Ta: 40°C Tc: 80°C	

B. PRODUCT DIMENSIONS

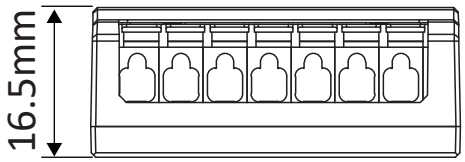

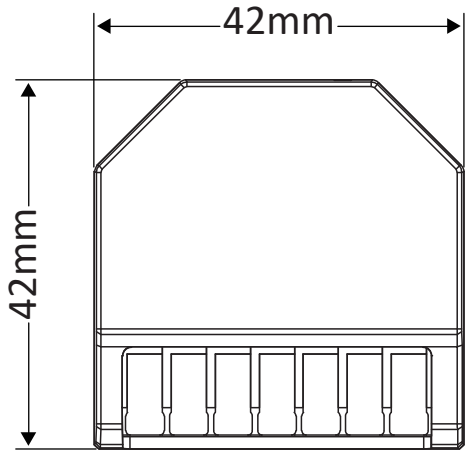

C. INSTALLATION

CAUTIONS:

Do not over-lift the lockup arms on the terminals.
Max openning angle is within 30° from the closed postion.

Cable Size: 0.8-2.5mm²

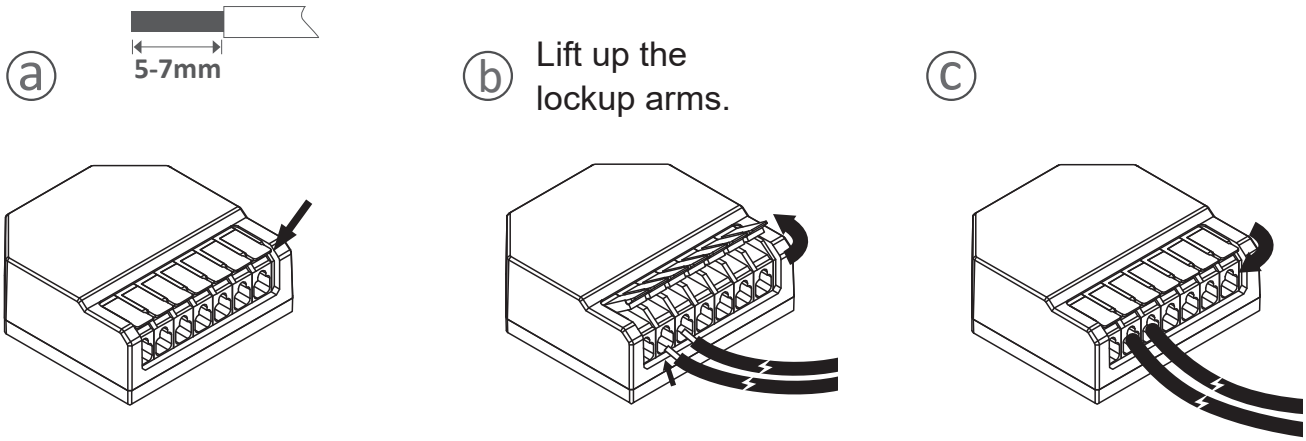

D . WIRING DIAGRAM

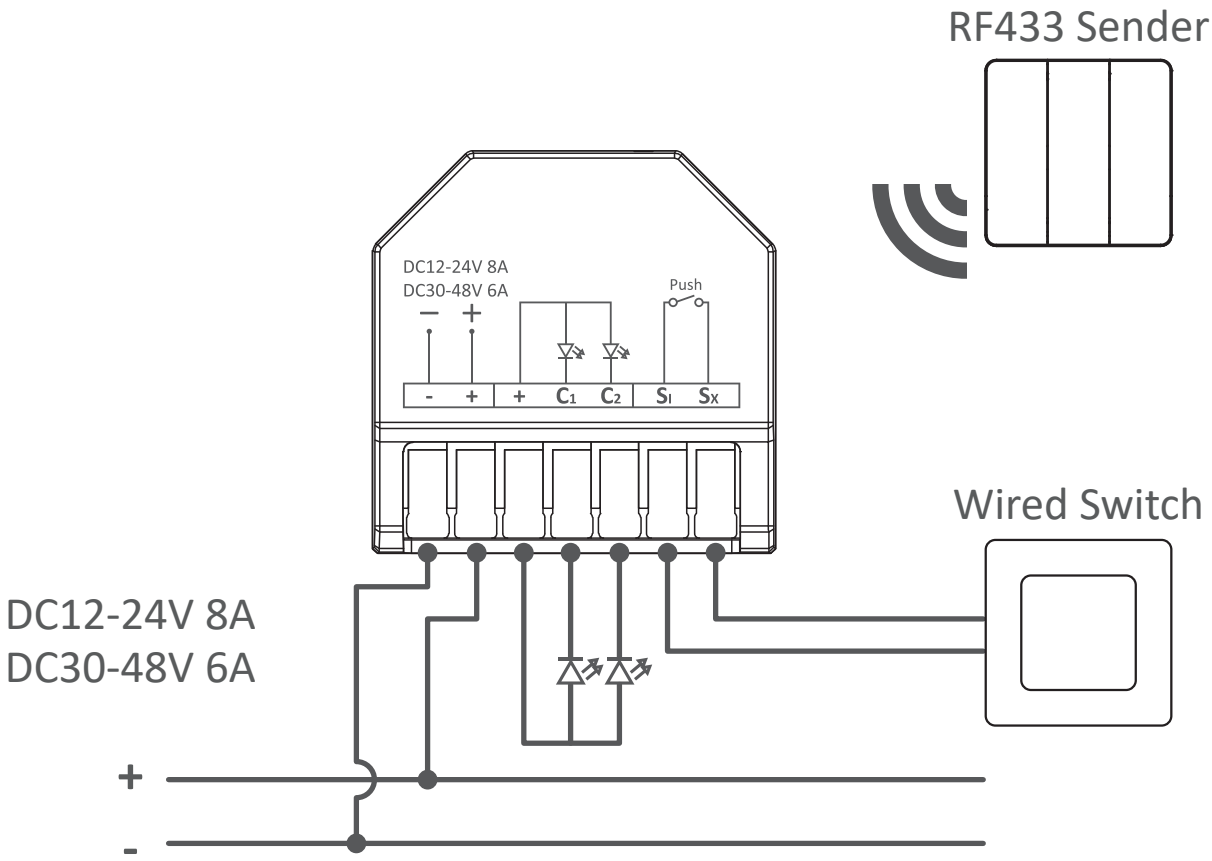

a. Power must be turn off before installation.
b. Installation must be carried out by professional electrician.

E. PAIRING PROCESS OVERVIEW

Short Press Prog. Key 1 / Prog. Key 2 to:

Turn On (Indicator light steady green)
Turn Off (Indicator light flashing green)

***K2 is for the 2 Channel pairing.**

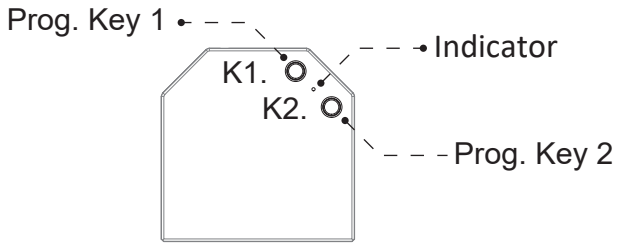

Long Press Prog. Key: **or** **Turn on/off Power Supply**

Functions: 5 Times 7 Times

	0s → 3s	3s → 6s	6s → 9s	9s → 12s	12s → 15s	15s →
K1.	Awaiting	RF Pairing	APP Pairing	RF Deletion	Awaiting	Full Reset
K2.	Awaiting	RF Pairing	/	RF Deletion	/	/
Indicator:	Constant red	Slow red flashing	Quick red flashing	Red & green alternating flashing	Constant red	Yellow-green flashing

F. PAIRING - WIRELESS RF433 SENDER

Option 1.

a. Press and hold the K1./K2. for **3s** until the **RED** indicator flashes slowly, and release to enter RF pairing window (the light will flash **Twice** and stay on).

b. While the RED indicator on the controller is flashing slowly, press the RF sender **ONCE** to complete the pairing.

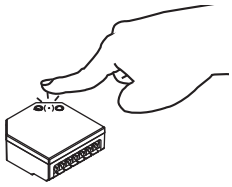

Hold on K1. / K2. over **3s**
Indicator: **RED** flashes **slowly**

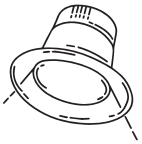

Light flash **Twice** and stay on

Option 2.

a.Turn On /Off the power supply 5 times constantly (*the **GREEN** indicator is on/off **5 times** constantly) to enter RF pairing window.

b.While the RED indicator on the controller is flashing slowly, press the RF sender **ONCE** to complete the pairing.

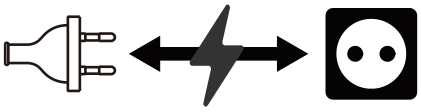

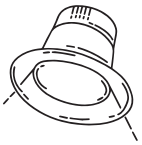

Light flash **Twice** and stay on

Turn On/Off the power supply **5 times** constantly
Indicator: **RED** flashes **slowly**

*COMPATIABLE RF433 SENDER(ORDER SEPARATELY)

1.Kinetic Switch: Self-powerd
2.Battery Switch: Battery-powered
3.Battery Remote: Battery-powered

***Please refer to the related RF sender's instruction manual on how to work.**

G. PAIRING - SMART APPLICATIONS

Option 1. Press and hold the K1./K2. for **6s** untill the **RED** indicator to **flash quickly** and release to enter App pairing window, the light would flash **3 times** and stay on.

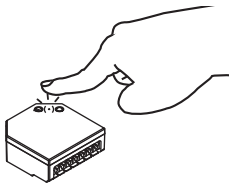

Hold on K1./K2. over **6s**
Indicator: **RED** flash **quickly**

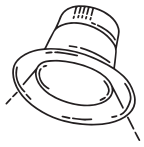

Light flash **3 times** and stay on

Option 2. Turn On/Off the power supply **7 times** constantly (*the **GREEN** indicator is on/off **7 times** constantly) to enter App pairing window, the light would flash **3 times** and stay on.

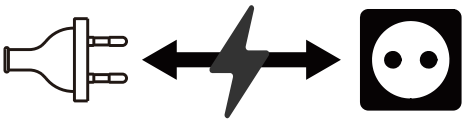

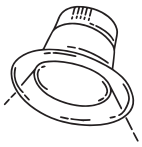

Light flash **3 times** and stay on

Turn on/off the power supply **7 times** constantly
Indicator: **RED** flash **quickly**

---

matter App Pairing (*the only RF version controller can't support*)

Preparation for matter over wifi App pairing:

a. Strong WiFi Signal cover is important to run this matter over WiFi receiver.
b. Only **2.4G** WiFi router compatible.
c. Open Location access to your preferred smart App before pairing.
d. Turn on Bluetooth on your smart phone.

2.4G WiFi

Location

Bluetooth

*COMPATIABLE APPLICATIONS

Simply scan the QR code on the controller with one of apps that compatiable with Matter to quick and easy setup.

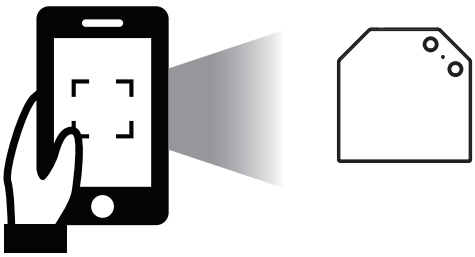

***Note: The Matter LED Controller requires a control center or a hub of the selected app platform!**

The Matter controller can work with all certified smart home platforms, such as:

HomeKit Google Home Alexa SmartThings

Other App: tuya *Only support local control.

Voice control: supports Apple HomePod, Amazon ECHO and Google Nest speakers.

H. UNPAIRING - RF433 SENDER

Press and hold the K1./K2. for **9s** untill the indicator to **flash alternately between Red and Green** and release to enter RF sender removing window (the light would flash **twice** and stay on).

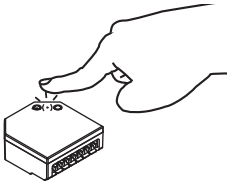

Hold on K1./K2. over **9s**
Indicator: **Red & Green** alternating flashing

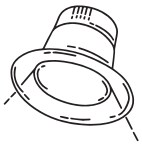

Light flash **Twice** and stay on

***Please also press RF Sender once to confirm whether the pairing has been cleared.**

I. FULL FACTORY RESET

Press and hold the Prog. Key for **15s** until the indicator flashes **Yellow-green** to complete a full factory reset (the light would flash **5 times** and stay on).

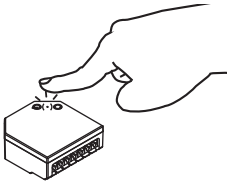

Hold on Prog. key over **15s**
Indicator: **Yellow-green** flashing

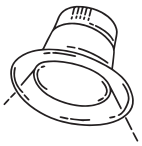

Light flash **5 times** and stay on

***Note: this will clear all RF sender and APP pairings on this controller!**